Work Order ID 71565

Wednesday, July 06, 2011 1:19:08 PM

Item ID: D2803-043 **Accept** **Setup Start**

Revision ID: **Stop**

Item Name: Bracket Assembly

Start Date: 7/6/2011 **Start Qty:** 4.00 **Cust Item ID:**

Required Date: 7/22/2011 **Req'd Qty:** 4.00 **Customer:**

Reference:

Run Start **Stop**

Approvals: **Process Plan:** CL **Date:** 11/07/06 **Tooling:** _____ **Date:** _____

QC: _____ **Date:** _____ **SPC (Y/N):** _____ **Date:** _____

Sequence ID/ Work Center ID	Operation Description	Set Up/ Run Hours	Tool ID	Tool #	Plan Code	Accept Qty	Reject Qty	Reject Number	Insp. Stamp
Draw Nbr	**Revision Nbr**								
D2803	Rev B								
100	Small Fab	0.00							
Small Fab	**Memo**	0.00							
Small Fab	Press D2805-3 into arm as per Dwg D2803								
110	QC5- Inspect part completeness to step on W/O	0.00							
QC	**Memo**	0.00							
Quality Control									
120	White Gloss(Ref:4.3.5.1) per QSI005 4.3-Alum	0.00							
Powdercoat	**Memo**	0.00							
Powder Coating	START TIME: 8:20 ☐OVEN TEMPERATURE: 320 °F ☐FINISH TIME: 8:50								

11/10/27 (4)

5 w 11/10/27

(4) -1

4X

M 11/10/28

M 117745

Dart Aerospace Ltd

W/O:		WORK ORDER CHANGES					
DATE	STEP	PROCEDURE CHANGE	By	Date	Qty	Approval Chief Eng / Prod Mgr	Approval QC Inspector

Part No: _____ PAR #: _____ Fault Category: _____ NCR: Yes No DQA: _____ Date: _____

Resolution: _____ Disposition: _____ QA: N/C Closed: _____ Date: _____

NCR:		WORK ORDER NON-CONFORMANCE (NCR)						
DATE	STEP	Description of NC Section A	Corrective Action Section B			Verification Section C	Approval Chief Eng	Approval QC Inspector
			Initial Chief Eng	Action Description Chief Eng	Sign & Date			

NOTE: Date & initial all entries

H:\fFORMS\Quality Assurance\approved QA\NCRWO RevE

Work Order ID 71565

Wednesday, July 06, 2011 1:19:08 PM

Item ID: D2803-043 **Accept** **Setup Start** **Stop**

Revision ID:

Item Name: Bracket Assembly

Start Date: 7/6/2011 **Start Qty:** 4.00 **Cust Item ID:**

Required Date: 7/22/2011 **Req'd Qty:** 4.00 **Customer:**

Reference:

Run Start **Stop**

Approvals: **Process Plan:** _____ **Date:** _____ **Tooling:** _____ **Date:** _____

QC: _____ **Date:** _____ **SPC (Y/N):** _____ **Date:** _____

Sequence ID/ Work Center ID	Operation Description	Set Up/ Run Hours	Tool ID	Tool #	Plan Code	Accept Qty	Reject Qty	Reject Number	Insp. Stamp
130	QC3- Inspect Part Finish	0.00				4	ϕ		11/10/20
QC	**Memo**	0.00							
Quality Control						COUNTED			
140	Small Fab	0.00							11/10/31
Small Fab	**Memo**	0.00							
Small Fab	Press D2809 into arm as per Dwg D2803								
150	Small Fab	0.00							11/10/31
Small Fab	**Memo**	0.00							
Small Fab	Assemble as per Dwg D2803.								

Dart Aerospace Ltd

W/O:		WORK ORDER CHANGES					
DATE	STEP	PROCEDURE CHANGE	By	Date	Qty	Approval Chief Eng / Prod Mgr	Approval QC Inspector

Part No: _____ **PAR #:** _____ **Fault Category:** _____ **NCR:** Yes No **DQA:** _____ **Date:** _____

Resolution: _____ **Disposition:** _____ **QA: N/C Closed:** _____ **Date:** _____

NCR:		WORK ORDER NON-CONFORMANCE (NCR)						
DATE	STEP	Description of NC Section A	Corrective Action Section B			Verification Section C	Approval Chief Eng	Approval QC Inspector
			Initial Chief Eng	Action Description Chief Eng	Sign & Date			

•**NOTE:** Date & initial all entries

H:\fFORMS\Quality Assurance\approved QA\NCRWO RevE

Work Order ID 71565

Wednesday, July 06, 2011 1:19:08 PM

Item ID: D2803-043 **Accept** **Setup Start** **Stop**

Revision ID:

Item Name: Bracket Assembly

Start Date: 7/6/2011 **Start Qty:** 4.00 **Cust Item ID:**

Required Date: 7/22/2011 **Req'd Qty:** 4.00 **Customer:**

Reference:

Run Start **Stop**

Approvals: **Process Plan:** _____ **Date:** _____ **Tooling:** _____ **Date:** _____

QC: _____ **Date:** _____ **SPC (Y/N):** _____ **Date:** _____

Sequence ID/ Work Center ID	Operation Description	Set Up/ Run Hours	Tool ID	Tool #	Plan Code	Accept Qty	Reject Qty	Reject Number	Insp. Stamp
160	QC5- Inspect part completeness to step on W/O	0.00				4			
QC	Memo	0.00	SB 11/10/30						
Quality Control									
170	Identify as per dwg & Stock Location SB 147	0.00							
Packaging	Memo	0.00				SB 11-10-31			
Packaging									
180	QC21- Final Inspection - Work Order Release	0.00						11/11/01	
QC	Memo	0.00							
Quality Control								MLF 11-10-31	

Dart Aerospace Ltd

W/O:		WORK ORDER CHANGES					
DATE	STEP	PROCEDURE CHANGE	By	Date	Qty	Approval Chief Eng / Prod Mgr	Approval QC Inspector

Part No: _____ PAR #: _____ Fault Category: _____ NCR: Yes No DQA: _____ Date: _____

Resolution: _____ Disposition: _____ QA: N/C Closed: _____ Date: _____

NCR:		WORK ORDER NON-CONFORMANCE (NCR)						
DATE	STEP	Description of NC Section A	Corrective Action Section B			Verification Section C	Approval Chief Eng	Approval QC Inspector
			Initial Chief Eng	Action Description Chief Eng	Sign & Date			

•NOTE: Date & initial all entries

H:\fFORMS\Quality Assurance\approved QA\NCRWO RevE

Picklist Print

Wednesday, July 06, 2011 1:19:06 PM

Work Order ID: 71565

Parent Item: D2803-043

Parent Item Name: Bracket Assembly

Start Date: 7/6/2011 **Required Date:** 7/22/2011

Start Qty: 4.00 **Required Qty:** 4.00

Comments: IPP D□05.03.30□MS21043-3 was MS21042L3□KJ/JLM□

Component Item ID/ Item Name	Replacement Item ID	Mfg/ Purch	Bin Item	Primary Location	Last Location	Route Seq ID	Unit of Measure	Qty on Hand	Qty per Kit	Total Qty	Qty Issued	Date Issued	Status
D2803-1 Bracket		Manufactured	No			100	Each	0.0000	1	4			
D2805-3 Stop		Manufactured	No			100	Each	5.0000	1	4			
NAS1515H3 Washer		Purchased	No			100	Each	166.0000	4	16			
AN3C16A Bolt		Purchased	No			150	Each	57.0000	2	8			

B71891 (4x) 11/10/27

Location		Loc Qty	Loc Code
MEZZ		5	
	25712	5	

B73572 (4x) 11/10/27

Location		Loc Qty	Loc Code
ST277		166	
	116373	6	
	117460	60	
	118078	100	

M118384 16x 11/10/31

Location		Loc Qty	Loc Code
ST352		57	
	115835	17	
	118191	40	

M118422 (8x) 11/10/31

Dart Aerospace Ltd

W/O:		WORK ORDER CHANGES					
DATE	STEP	PROCEDURE CHANGE	By	Date	Qty	Approval Chief Eng / Prod Mgr	Approval QC Inspector

Part No: _____ **PAR #:** _____ **Fault Category:** _____ **NCR:** Yes No **DQA:** _____ **Date:** _____

Resolution: _____ **Disposition:** _____ **QA: N/C Closed:** _____ **Date:** _____

NCR:		WORK ORDER NON-CONFORMANCE (NCR)						
DATE	STEP	Description of NC Section A	Corrective Action Section B			Verification Section C	Approval Chief Eng	Approval QC Inspector
			Initial Chief Eng	Action Description Chief Eng	Sign & Date			

NOTE: Date & initial all entries

H:\fFORMS\Quality Assurance\approved QA\NCRWO RevE

Picklist Print

Wednesday, July 06, 2011 1:19:06 PM

Work Order ID: 71565

Parent Item: D2803-043

Parent Item Name: Bracket Assembly

Start Date: 7/6/2011 **Required Date:** 7/22/2011

Start Qty: 4.00 **Required Qty:** 4.00

D2809	Manufactured	No	150	Each	18.0000	1	4	11/10/31
Bushing								

Location	Loc Qty	Loc Code
ST	6	
70805	6	
ST023	12	
34035	12	

B72735 (4x)

MS21043-3	Purchased	No	150	Each	1,119.000	2	8	11/10/31
Nut								

Location	Loc Qty	Loc Code
FG	72	
103691	72	
ST301	1047	
112314	69	
118077	978	

M118686 (82)

Dart Aerospace Ltd

W/O:		WORK ORDER CHANGES					
DATE	STEP	PROCEDURE CHANGE	By	Date	Qty	Approval Chief Eng / Prod Mgr	Approval QC Inspector

Part No: _____ **PAR #:** _____ **Fault Category:** _____ **NCR:** Yes No **DQA:** _____ **Date:** _____

Resolution: _____ **Disposition:** _____ **QA: N/C Closed:** _____ **Date:** _____

NCR:		WORK ORDER NON-CONFORMANCE (NCR)						
DATE	STEP	Description of NC Section A	Corrective Action Section B			Verification Section C	Approval Chief Eng	Approval QC Inspector
			Initial Chief Eng	Action Description Chief Eng	Sign & Date			

NOTE: Date & initial all entries

H:\fFORMS\Quality Assurance\approved QA\NCRWO RevE

DESIGN	DRAWN BY	DART AEROSPACE LTD HAWKESBURY, ONTARIO, CANADA	
CP	CP		
CHECKED	APPROVED	DRAWING NO.	REV. B
		D2803	SHEET 1 OF 2
DATE		TITLE	SCALE
04.11.22		STA 84 BRACKET	1:3

A	00.11.07	NEW ISSUE
B	04.11.22	ADD CUTOUTS & −043/−044

RELEASED
05.03.11

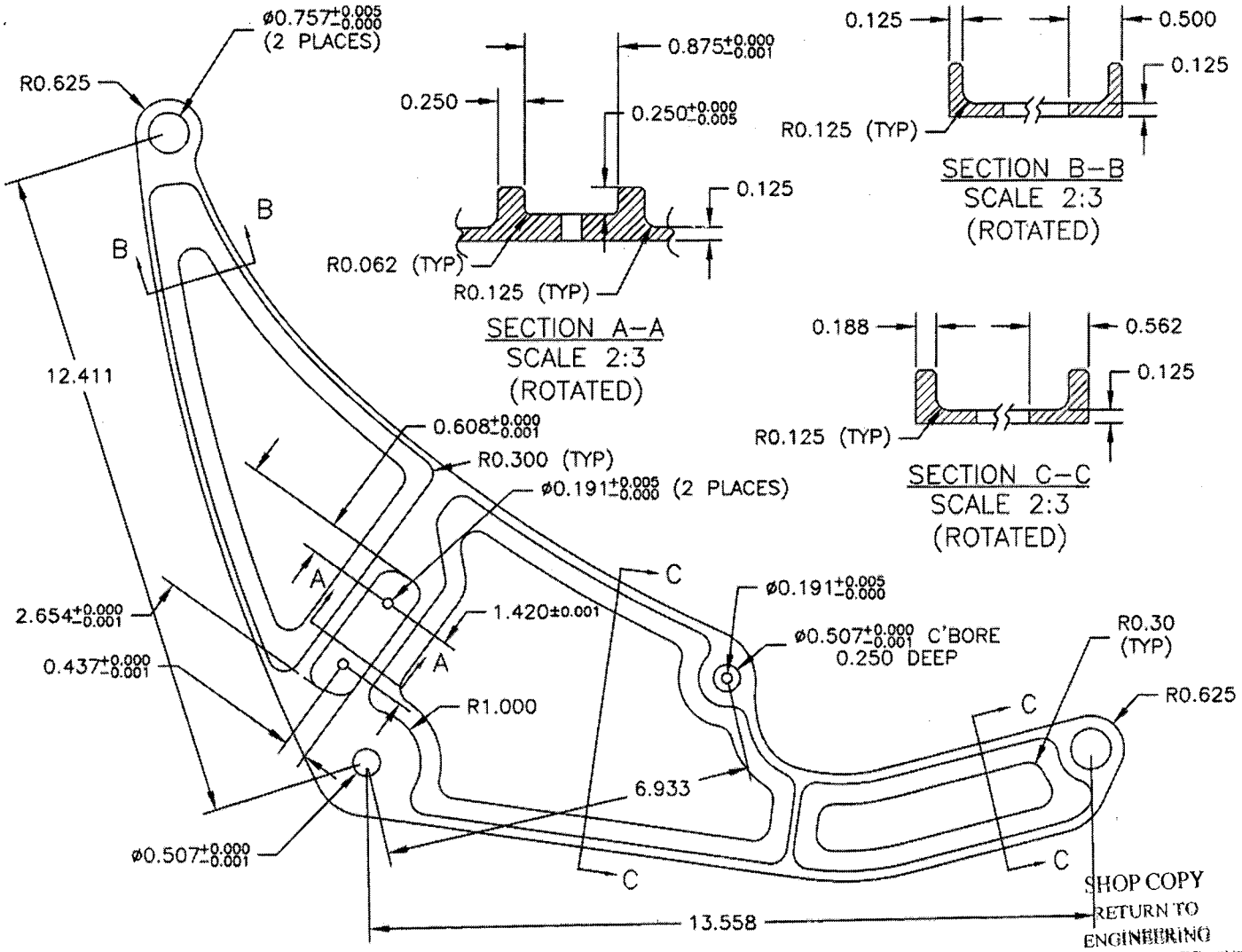

SHOP COPY
RETURN TO
ENGINEERING
UNCONTROLLED COPY
SUBJECT TO AMENDMENT
WITHOUT NOTICE
WORK ORDER
NO. 71565

D2803−1 BRACKET (SHOWN), D2803−2 BRACKET (OPPOSITE)

1) MACHINE PER DRAWING FILE "D2803.SLDPRT"
2) MATERIAL: 6061−T6 (QQ−A−200/8) OR (QQ−A−250/11) 0.500 THICK
3) DEBURR TO LEAVE R0.030 − 0.063 ON ALL EDGES
4) FINISH: CHEMICAL CONVERSION COAT PER DART QSI 005 4.1
5) TOLERANCES ARE PER DART QSI 018 UNLESS OTHERWISE NOTED

CL 11/07/06

Copyright © 2000 by DART AEROSPACE LTD

THIS DOCUMENT IS PRIVATE AND CONFIDENTIAL AND IS SUPPLIED ON THE EXPRESS CONDITION THAT IT IS NOT TO BE USED FOR ANY PURPOSE OR COPIED OR COMMUNICATED TO ANY OTHER PERSON WITHOUT WRITTEN PERMISSION FROM DART AEROSPACE LTD.

DESIGN	DRAWN BY	DART AEROSPACE LTD HAWKESBURY, ONTARIO, CANADA	
CP	CP		
CHECKED	APPROVED	DRAWING NO.	REV. B
		D2803	SHEET 2 OF 2
DATE		TITLE	SCALE
04.11.22		STA 84 BRACKET	1:3

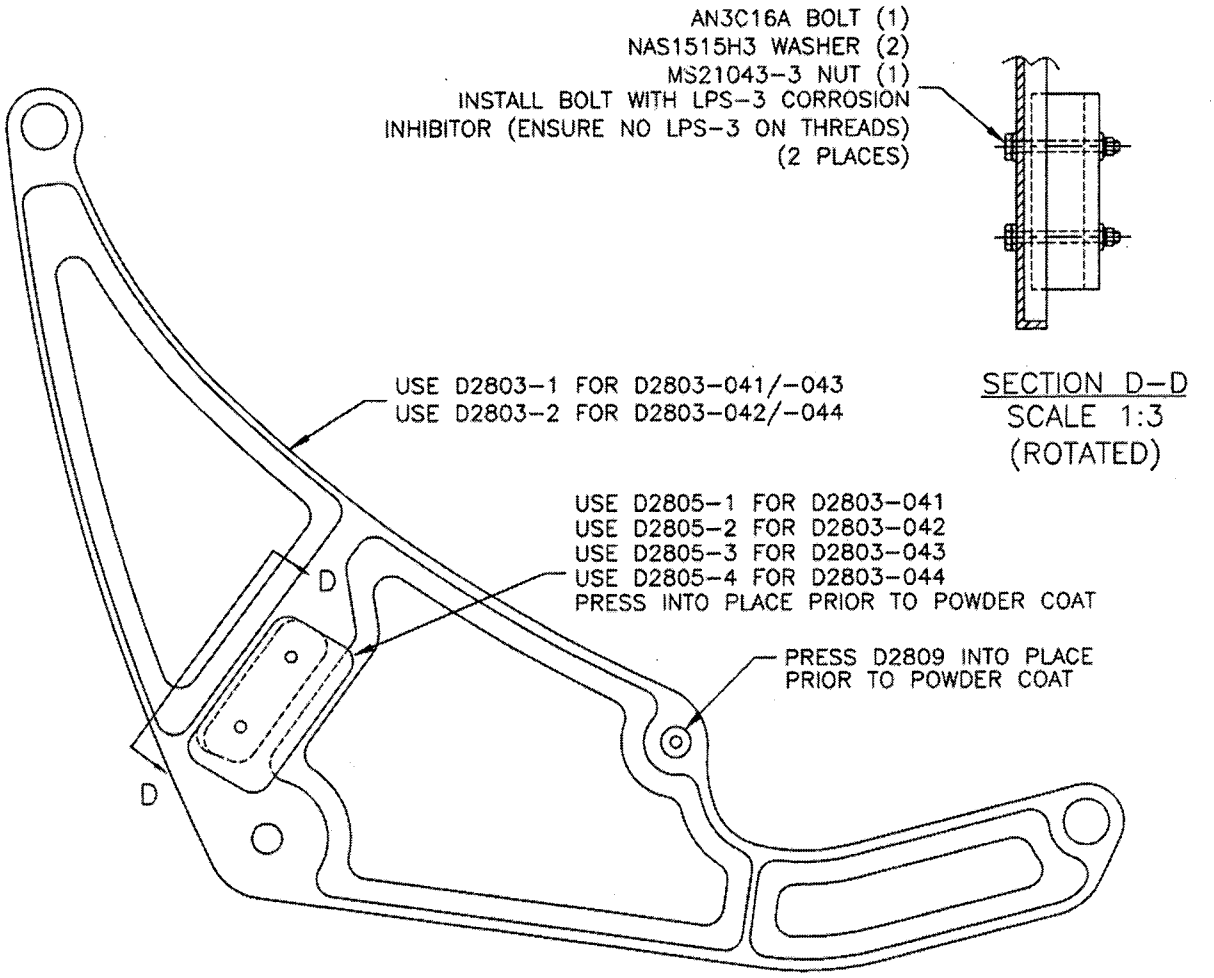

SUBJECT TO AMENDMENT WITHOUT NOTICE
WORK ORDER
NO. 71565

RELEASED
05-03-11

D2803-041/-043 BRACKET ASS'Y (SHOWN).
D2803-042/-044 BRACKET ASS'Y (OPPOSITE)

6) FINISH: POWDER COAT ASSEMBLY GLOSS WHITE (4.3.5.1) OR GREY SANDTEX (4.3.5.6) OR BLACK SANDTEX (4.3.5.7) OR GREEN SANDTEX (4.3.5.8) PER DART QSI 005 4.3

Copyright © 2000 by DART AEROSPACE LTD

THIS DOCUMENT IS PRIVATE AND CONFIDENTIAL AND IS SUPPLIED ON THE EXPRESS CONDITION THAT IT IS NOT TO BE USED FOR ANY PURPOSE OR COPIED OR COMMUNICATED TO ANY OTHER PERSON WITHOUT WRITTEN PERMISSION FROM DART AEROSPACE LTD.